HT-286

Installation Manual

HT-286

Installation Manual

CONTENT OF TABLE

About the BABY-AT Motherboard 1
Quick Installing Guide 2
How to Set up An Evaluation Motherboard 4
EMS Driver Set-Up 10
Connector Pinout 12
Instruction for EMS Driver Preparation 14
Memory Address 16
EMS Interface 17
System Block Diagram 18
BABY-AT Motherboard Layout 19

ABOUT THE BABY-AT MOTHERBOARD

Specification

* 6 or 12 MHz 80286 selectable by keyboard or by hardware switch
* 4 mega byte high-speed memory standard
* 16 mega byte expandable in the protected virtual address mode
* 2 sockets for PHOENIX or AWARD or ERSO or AMI BIOS fully compatible with IBM BIOS.
* 8 I/O expansion slots
* Socket for 80287 numberic processor
* CMOS clock and calender circuit
* Battery on-board and easily serviceable for replacement
* 6 custom chips set used to reduce total ICs
* EMS control circuit
* 24-bit addressing and 16-bit data pathing capabilities
* 16-level interrupt
* 7-channel direct memory access (DMA)
* 3-programmable timers
* Speaker/keyboard connector
* Standard AT power supply connector
* Small AT dimensions
* High temperature burned-in
* 0-wait-state or 1-wait-state selectable.
* Speed: O-wait-state 7.8/16 MHz
  1-wait-state 6/12 MHz

QUICK INSTALLING GUIDE

Peripherals Required:

1) BABY-AT 4 Mega Byte system board.
2) IBM AT power supply or compatible equivalent
3) IBM monochrome/graphic display board or color card or EGA card or compatible equivalent.
4) IBM keyboard or compatible equivalent.
5) Monochrome or color monitor or EGA Monitor.

Pracdures:

1) Connect power supply connectors to P8 as marked.
2) Plug in keyboard connector to the keyboard receptical (J22) at the back.
3) Install monochrome or color graphic display board in expansion slot 1 or 7.
4) Select monochrome or color at switch (SW1)

Bit1-2	Bit2-3	TYPE
ON	OFF	MGI
OFF	ON	color

5) Connect monitor cable to the display board.
6) Make sure "LOW BYTE" or "EVEN BYTE" BIOS is ON IC23.
7) Make sure "HIGH BYTE" or "ODD BYTE" BIOS is ON IC33.
8) Set the RAM size as follows by DIP Switch DSP1: #6–8.

#8	#7	#6	MODE	SIZE
ON	ON	ON	0	512KB
OFF	ON	ON	1	640KB
ON	OFF	ON	2	640KB + 384KB
OFF	OFF	ON	3	640KB + EMS (384KB)
ON	ON	OFF	4	640KB + 1408KB
OFF	ON	OFF	5	640KB + EMS (1048KB)
ON	OFF	OFF	6	640KB + 3456KB
OFF	OFF	OFF	7	640KB + EMS (3456KB)

9) For a board that does not have two on board batteries (Lithium Battery BR2325 3V), plug in the external blackup power pack (6V) to J21 connector at the back.
10) For those which have the IBM PC/AT chasis or compatible equivalent, plug in the speaker connector to J19, and the Key Lock and Power LED connector to J20 at the front.
11) Turn on the monitor.
12) Turn on the power supply.

HOW TO SET UP AN EVALUATION MOTHERBOARD

A. BIOS ROM

1. BIOS ROM (Lo) is inserted into ROM1.
2. BIOS ROM (Hi) is inserted into ROM3.
3. When 27128 type is used, JP9 is set to 1-2 side, and DSP1 switch -5 is set to ON.
4. When 27256 type is used, JP9 is set to 2-3 side, and DSP1 switch -5 is set to OFF.

B. KEYBOARD BIOS

1. 8742 with keyboard BIOS programmed in it is inserted into 8742-marked location.
2. When an AWARD type keyboard BIOS (switchable by using Port 22) is used, JP7 is set to 2-3 side.
3. When a PHOENIX type keyboard BIOS (switchable by using Port 15) is used, JP7 is set to 1-2 side.

C. DRAM

1. A total of 8 (0-7) modes are available, depending on memory sizes, for insertion of DRAMs. A figure below shows ways of the DRAM insertion. When 4164 or 41256 DRAM is used, either DRAM is inserted to the 16-pin side. When 411000 DRAM is used, it is inserted to the 18-pin side.

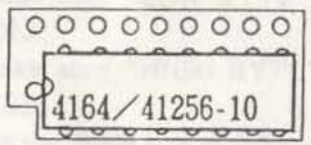

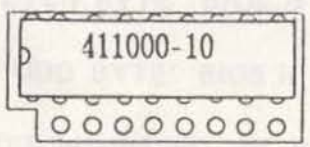

2. For base RAM setting, J18 is set to 2-3 side.
3. Mode 0
   A total of 18 DRAMs (41256-10) are inserted onto BANK 0. The DSP1switches -6, -7, and -8 are each set to ON. In this instance, the memory location is 00000 – 7FFFFH and the memory size is 512KB.
4. Mode 1
   A total of 18 DRAMs (41256-10) are inserted onto BANK 0, and a total of 18 DRAMs (4164-10) are inserted onto BANK 1. The DSP1switches -6, -7, and -8 are set to ON, ON, OFF, respectively. In this instance, the memory location is 00000 – 9FFFFH, and the memory size is 640KB.
5. Mode 2
   A total of 18 DRAMs (41256-10) are inserted onto BANK 0, and a total of 18 DRAMs (41256-10) are inserted onto BANK 1. The DSP1switches -6, -7, and -8 are set to ON, OFF, ON, respectivery. In this instance, the memory locations are 00000 – 9FFFFH, 100000H – 15FFFFH, and memory size is 640KB + 384KB.
6. Mode 3
   A total of 18 DRAMs (41256-10) are inserted onto BANK 0, and a total of 18 DRAMs (41256-10) are inserted onto BANK 1. The DSP1switches -6, -7, and -8 are set to ON, OFF, OFF respectively. In this instance, the memory location is 00000 – 9FFFFH, and the memory size is 640KB + EMS (384KB). The EMS (384KB) memory can be used as an EXPAND memory with a capacity of 16KB x 24 pages, by using a SUNTAC EMS driver program.
7. Mode 4
   A total of 18 DRAMs (411000-10) are inserted onto

BANK 0. The DSP1 switches -6, -7, and -8 are set to OFF, ON, ON, respectively. In this instance, the memory locations are 00000 – 9FFFFH, 100000H – 25FFFFH, and the memory size is 640KB + 1,408KB.

8. Mode 5
   A total of 18 DRAMs (411000-10) are inserted onto BANK 0. The DSP1 switches -6, -7, and -8 are set to OFF, ON, OFF, respectively. In this instance, the memory location is 00000 – 9FFFFH, and the memory size is 640KB + EMS (1,408KB). The EMS (1,4808KB) memory can be used as an EXPAND memory with a capacity of 16KB x 88 pages, by using a SUNTAC EMS driver program.
9. Mode 6
   A total of 18 DRAMs (411000-10) are inserted onto BANK 0, and a total of 18 DRAMs (411000-10) are inserted onto BANK 1. The DSP1 switches -6, -7, and -8 are set to OFF, OFF, ON, respectively. In this instance, the memory locations are 00000 – 9FFFFH, 100000H – 45FFFFH and the memory size is 640KB + 3,456KB.
10. Mode 7
    A total of 18 DRAMs (411000-10) are inserted onto BANK 0, and a total of 18 DRAMs (411000-10) are inserted onto BANK 1. The DSP1 switches -6, -7, and -8 are set to OFF, OFF, OFF, respectively. In this instance, the memory location is 00000 – 9FFFFH, and the memory size is 640KB + EMS (3,456KB). The EMS (3,456KB) memory can be used as an EXPAND memory with a capacity of 16KB x 216 pages, by using a SUNTAC EMS driver program.

D. MONITOR TYPE

1. When a color monitor is used, the SW1 is set to 2-3 side.
2. When a monochrome monitor is used, the SW1 is set to 1-2 side.

E. CLOCK SPEED SWITCHING

1. When fixing to High Speed:
   JP1 is set to 2-3 side, and DSP1 switch -1 is set to OFF.
2. When fixing to Low Speed:
   JP1 is set to 2-3 side, and DSP1 switch -1 is set to ON.
3. When switching speeds externaiiy:
   JP1 is set to 1-2 side, and a mechanical switch is installed onto JP4.
   JP4 in state of OPEN provides LOW Speed, and JP4 in state of CLOSE provides High Speed.

   When JP4 is OPEN, the clock speed can be switched by use of the keyboard.
   When using AWARD BIOS, keys (CNTL, ALT and 1) are pressed simultaneously to turn to High Speed, and keys (CNTL, ALT and 2) are pressed simultaneously turn to Low Speed.

   When JP4 is OPEN and then power is turned on, it will turn to Low Speed.
   When JP4 is CLOSE and power is turned on, it will invalidate the keyboard operation and will turn to High Speed at all times.

F. I/O WAIT SELECTION

1. When fixing to 4 WAIT:
   JP3 is set to 2-3 side, and DSP1 switch -3 is set to ON.

2. When fixing to 6 WAIT:
   JP3 is set to 2-3 side,and DSP1switch -3 is set to OFF.
3. When selecting WAIT in conjunction with external clock speed switching:
   JP3 is set to 1-2 side, At this point, 6 WAIT is selected when the external clock speed is switched to High Speed; 4 WAIT is selected when it is switched to Low Speed.

G. EMS PORT ADDRESS

1. When using 0E8H– 0EFH as EMS Port Address,DSP1 switch -4 is set to OFF. SUNTAC EMS driver program setting is used at this point.
2. When using 098H- 09FH as EMS Port Address,DSP1 switch -4 is set to ON. SUNTAC EMS driver program setting is used at this point.

H. EXTERNAL EMS SELECTION SWITCH

A mechanical switch is installed onto JP5. This will allow RAM size setting mode to be switched externally as follows: Mode 2 to Mode 3, Mode 4 to Mode 6, Mode 6 to Mode 7, respectively. In this instance,DSP1 switch -8 is set to OFF.

I. RESET SWITCH

A mechanical switch is installed onto JP6. When JP6 is OPEN, the CPU will run, and when JP6 is CLOSE, the CPU will be reset.

J. MAIN MEMORY 0 WAIT MODE

A following additional circuit needs to be installed when main memories are used at 0 WAIT mode:

1. An additional circuit to be needed for 0 WAIT when DRAM is in state of READ or WRITE:

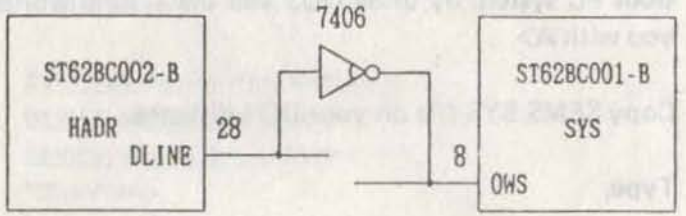

2. An additional circuit to be needed for 0 WAIT whe DRAM is in state of READ:

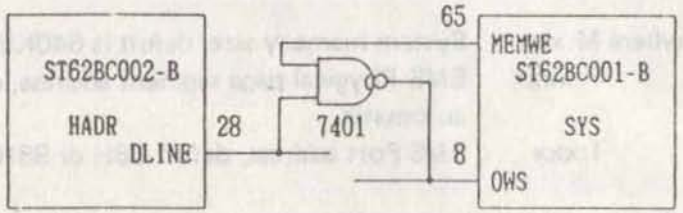

3. An additional circuit to be needed for 0 WAIT when DRAM is in state of READ or WRITE and when PROM is in state of READ:

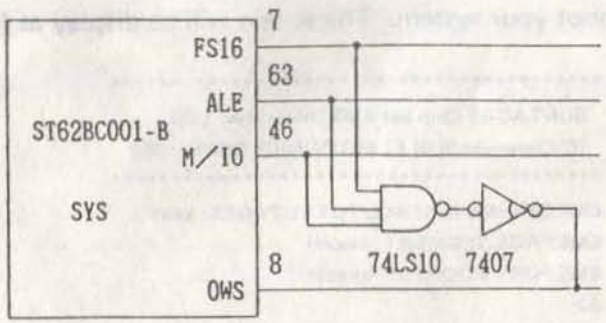

EMS DRIVER SET-UP

1. Boot PC system by using DOS and the system will prompt you with A>

2. Copy SEMS.SYS file on your DOS diskette.

3. Type:

```
COPY CON CONFIG.SYS<ENTER>
DEVICE=SEMS.SYS /M:xxx /P:xxxx /I:xxx<ENTER>
^Z<ENTER>
```

where M:xxx : System memory size, defult is 640KB.
P:xxxx : EMS Phygical page segment address, defult automatic.
I:xxx : EMS Port address, defult E8H or 98H.

The screen will display as follows:

```
        1 File(s) copied
A>
```

4. Reboot your system. The screen will be display as follows:

```
****************************************
 SUNTAC-62 Chip Set EMS Driver Rev. 1.00
 (C)Copyright SUN ELECTRONICS CORP. 1987
****************************************
EMS DRIVER INSTALL TOTAL PAGES: xxxx
EMS PAGE SEGMENT: xxxxH
EMS PORT ADDRESS: xxxxH
A>
```


5. You can run the RAMBANK software like VD.SYS, PB.COM, RAMTEST. example:
When 384K has been set as virtual disk, then type in command line in:

```
COPY CON CONFIG.SYS<ENTER>
DEVICE=SEMS.SYS<ENTER>
DEVICE=VD.SYS /384/<ENTER>
^Z<ENTER>
```

CONNECTOR PINOUT

1. POWER SUPPLY CONNECTOR (P8)

PIN	DESCRIPTION
1	POWER GOOD
2	+ 5V DC
3	+12V DC
4	-12V DC
5	GROUND
6	GROUND
7	GROUND
8	GROUND
9	- 5V DC
10	+ 5V DC
11	+ 5V DC
12	+ 5V DC

2. SPEAKER CONNECTOR (J19)

PIN	DESCRIPTION
1	SPEAKER DATA OUT
2	KEY
3	GROUND
4	+ 5V DC

3. KEYBOARD SWITCH & LED CONNECTOR (J20)

PIN	DESCRIPTION
1	LED POWER
2	KEY
3	GROUND
4	KEYBOARD INHIBITOR
5	GROUND

4. KEYBOARD CONNECTOR (J22)

PIN	DESCRIPTION
1	KEYBOARD CLOCK
2	KEYBOARD DATA
3	SPARE
4	KEYBOARD GROUND
5	+ 5V DC

5. BATTERY CONNECTOR (J21)

PIN	DESCRIPTION
1	BATTERY + 6V DC
2	KEY
3	GROUND
4	GROUND

6. RESET CONNECTOR (JP6)

PIN	DESCRIPTION
1	RESET IN
2	GROUND

7. HIGH SPEED LED CONNECTOR (JP5)

PIN	DESCRIPTION
1	+ ANODE
2	- CATHODE

NOTES: 1. XTAL SET 25MHz = LED ON
2. XTAL SET 12MHz = LED OFF

INSTRUCTION FOR EMS DRIVER PREPARATION

1. After power is turned on, and before DRAM begins refreshing, an initial value needs to be written in EMS Register R0 (This writing to be done within BIOS ROM).

   Initial values
   (1) Write 9DH when I/O port address is E8H.
   (2) Write 93H when I/O port address is 98H.

2. When data has been written in EMS Registers R0-R7, Bit 7 in R0 has to be read as a way to confirm if the Register contents have been transferred from DADR to HADA.

   (1) When Bit 7 in R0 is 1, it means that the transfer has yet to be achieved.
   (2) When Bit 7 in R0 is 0, it means that the transfer has been achieved.

3. The system memory size in EMS Register shall not be set at any value larger than 640KB (A0H).

4. The segment start address in EMS Register R3 shall not be set at any value smaller than the system memory size (R2).

5. When setting the page Nos. of banks 0-3 in EMS Registers R4-R7, these Nos. shall correspond to these page Nos. counted, by 16KB unit, from the DRAM address 0000 : 0000H.

Example

When EMS has a system memory size of 640KB and the usable page head is to be set: 640 ÷ 16 = 40 (28H)
Therefore, 28H is set as the page head.

Incidentally, a physical page can be released by setting its corresponding bank at 0.

6. The banks 0-3 in EMS Registers R4-R7 are always in crrespondence to physical pages 0-3.

7. When the system memory size is 1MB (as shown in the Memory Address Setting 3 in an attached Table), the setting of EMS page No. at 40H will result in production of an image from the memory's 0000 : 0000H.

8. EMS maximum page Nos. are 216 pages at 4MB. The memory size that can be used with DOS is 640KB.

MEMORY ADDRESS

DRAM

NO	DIP Switch setting			Memory type		Memory size	Memory Location
	S6	S7	S8	BANK1	BANK0		
0	ON	ON	ON	NONE	256Kbits	512KB	0~7FFFF
1	ON	ON	OFF	64Kbits	256Kbits	640KB	0~9FFFF
2	ON	OFF	ON	256Kbits	256Kbits	640KB+384KB	0~ 9FFFF 10000~15FFFF
3	ON	OFF	OFF	256Kbits	256Kbits	640KB+EMS(16KBx24pages)	0~ 9FFFF
4	OFF	ON	ON	NONE	1Mbits	640KB+1408KB	0~ 9FFFF 10000~25FFFF
5	OFF	ON	OFF	NONE	1Mbits	640KB+EMS(16KBx88pages)	0~ 9FFFF
6	OFF	OFF	ON	1Mbits	1Mbits	640KB+3456KB	0~ 9FFFF 10000~45FFFF
7	OFF	OFF	OFF	1Mbits	1Mbits	640KB+EMS(16KBx216pages)	0~ 9FFFF

PROM

Memory type	ROM0, ROM2 Location address	ROM1, ROM3 Location address
128Kbits	0E0000 ~ 0E7FFF 0F0000 ~ 0F7FFF FE0000 ~ FE7FFF FF0000 ~ FF7FFF	0E8000 ~ 0EFFFF 0F8000 ~ 0FFFFF FE8000 ~ FEFFFF FF8000 ~ FFFFFF
256Kbits	0E0000 ~ 0EFFFF FE0000 ~ FEFFFF	0F0000 ~ 0FFFFF FF0000 ~ FFFFFF

EMS INTERFACE

EMS Port Address

EMS98/E8	Location	Description
"L"	E8H	Access to 80287 is impossible at E8 - EFH.
"H"	98H	Access to 74LS612 is imposible at 98 - 9FH.

EMS Registers

		D7	D6	D5	D4	D3	D2	D1	D0	Description
R0	Variable port address. Transfer flag. (Read) R0 Read enable (Write)	T/R flag	Variable port address.							T/R flag Read 1:Transfer yet to be done 0:Transfer done Write 1:Read possible 0:Read imposible
			A9	A8	A7	A6	A5	A4	A3	
R1	Reserved.									
R2	System memory size.	A19	A18	A17	A16	A15	A14	fixed 0		Read imposible (A0H:00000~9FFFFH)
R3	Segment start address.	A19	A18	A17	A16	A15	A14	fixed 0		Read imposible (C0H:segmentC000H)
R4	Bank 0	P7	P6	P5	P4	P3	P2	P1	P0	Read imposible
R5	Bank 1	P17	P16	P15	P14	P13	P12	P11	P10	Read imposible
R6	Bank 2	P27	P26	P25	P24	P23	P22	P21	P20	Read imposible
R7	Bank 3	P37	P36	P35	P34	P33	P32	P31	P30	Read imposible

SYSTEM BLOCK DIAGRAM

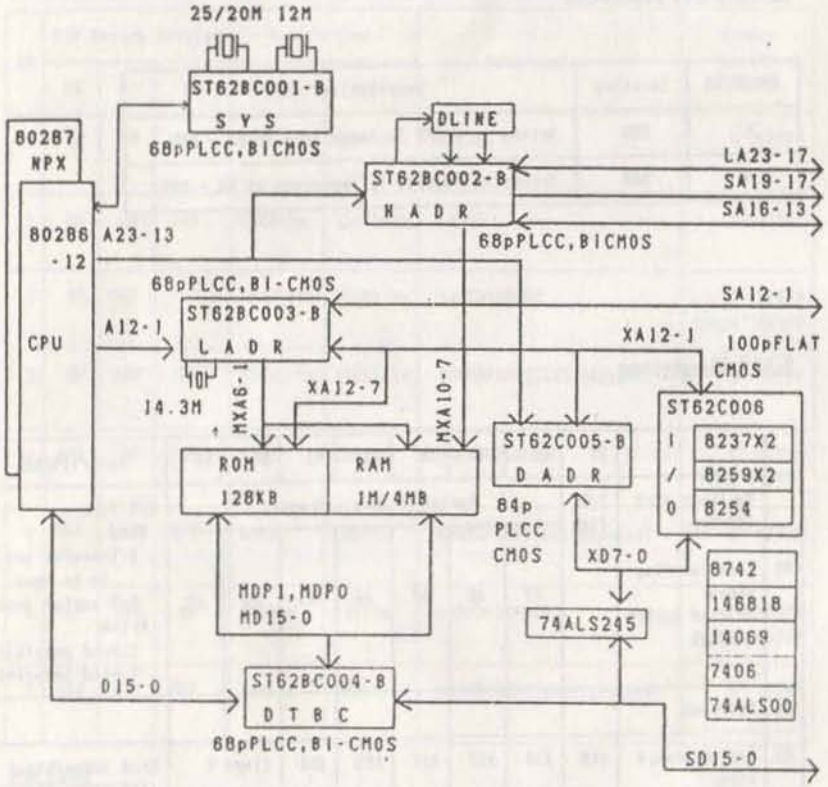

BABY-AT Motherboard Layout

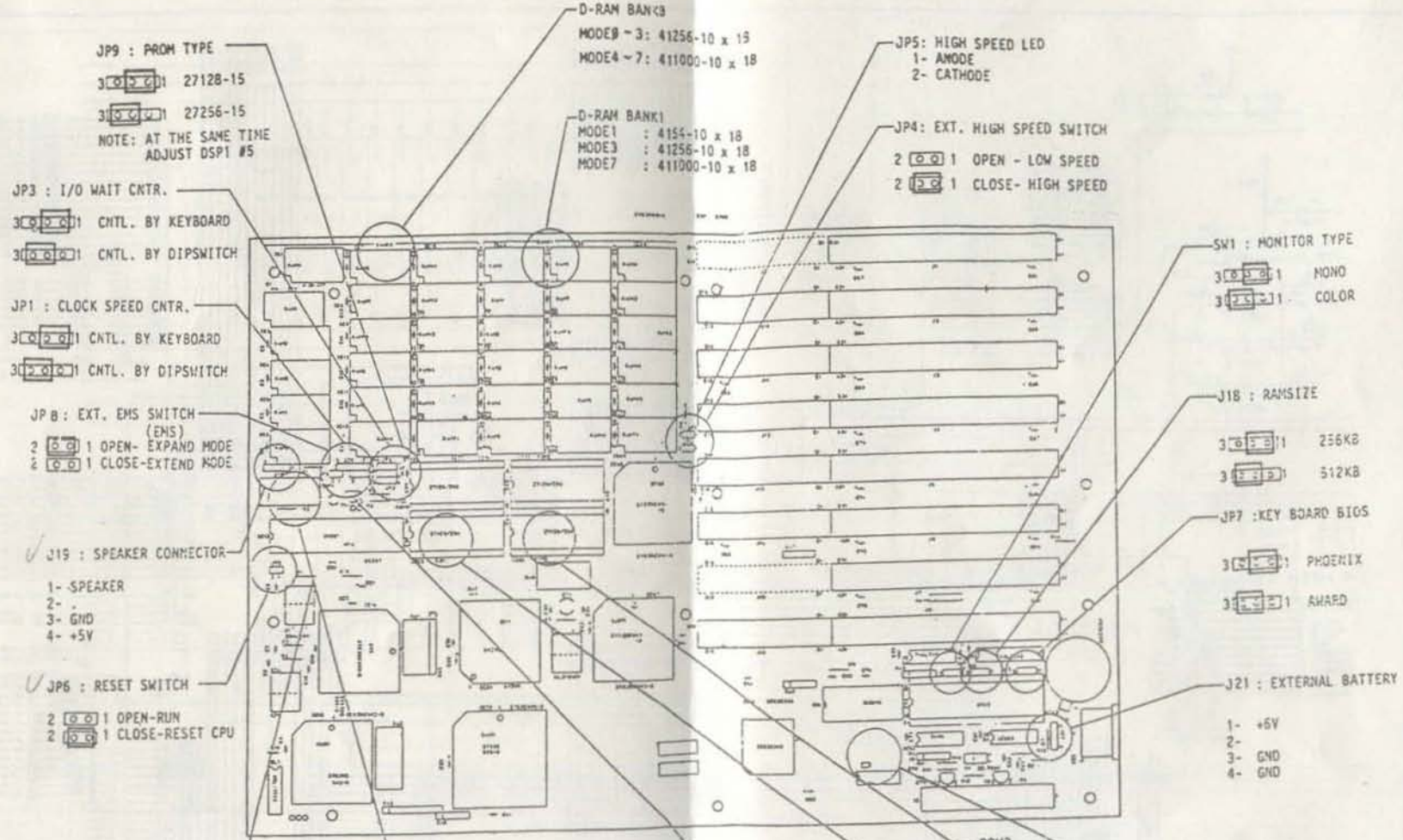

	ON	OFF
#1 :CLOCK SPEED	LOW	HIGH
#2 :TEST	NOMAL	-
#3 :I/O WAIT	4WAIT	6WAIT
#4 :EMSPORT ADDRESS	#E8H	#98H
#5 :PROM TYPE	27128	27256

#8	#7	#6	MODE	SIZE
ON	ON	ON	0	512KB
OFF	ON	ON	1	640KB
ON	OFF	ON	2	640KB+384KB
OFF	OFF	ON	3	640KB+EMS(384KB)
ON	ON	OFF	4	640KB+1,408KB
OFF	ON	OFF	5	640KB+EMS(1,408KB)
ON	OFF	OFF	6	640KB+3,456KB
OFF	OFF	OFF	7	640KB+EMS(3,456KB)

NOTE: #1, #3 ARE ENABLE WHEN JP1(2-3),JP3(2-3) ARE CLOSED.

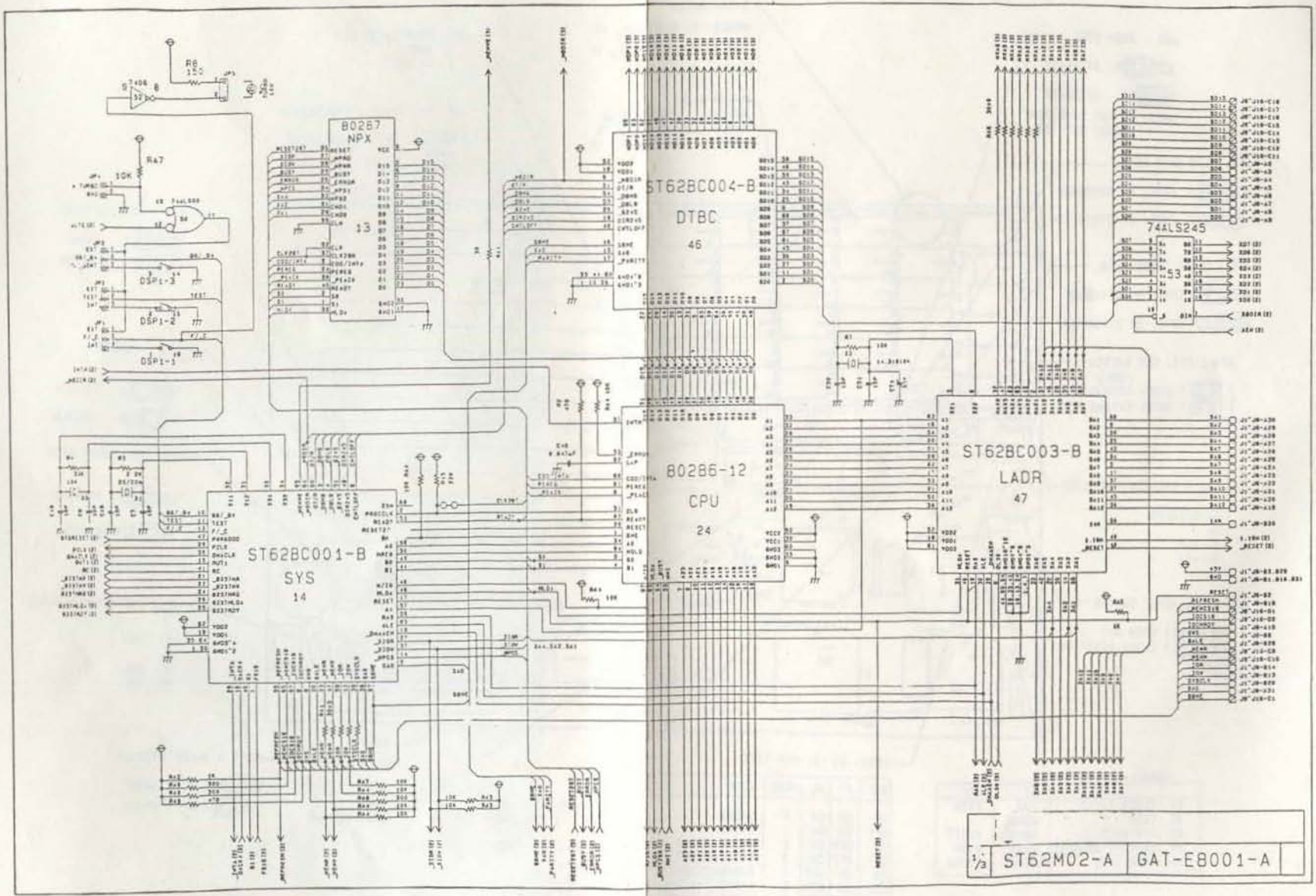
B0287
NPX
13
ST62BC004-B
DTBC
46
74ALS245
53
ST62BC003-B
LADR
47
B0286-12
CPU
24
ST62BC001-B
SYS
14
DSP1-3
DSP1-2
DSP1-1
R47
10K
1/3
ST62M02-A
GAT-E8001-A

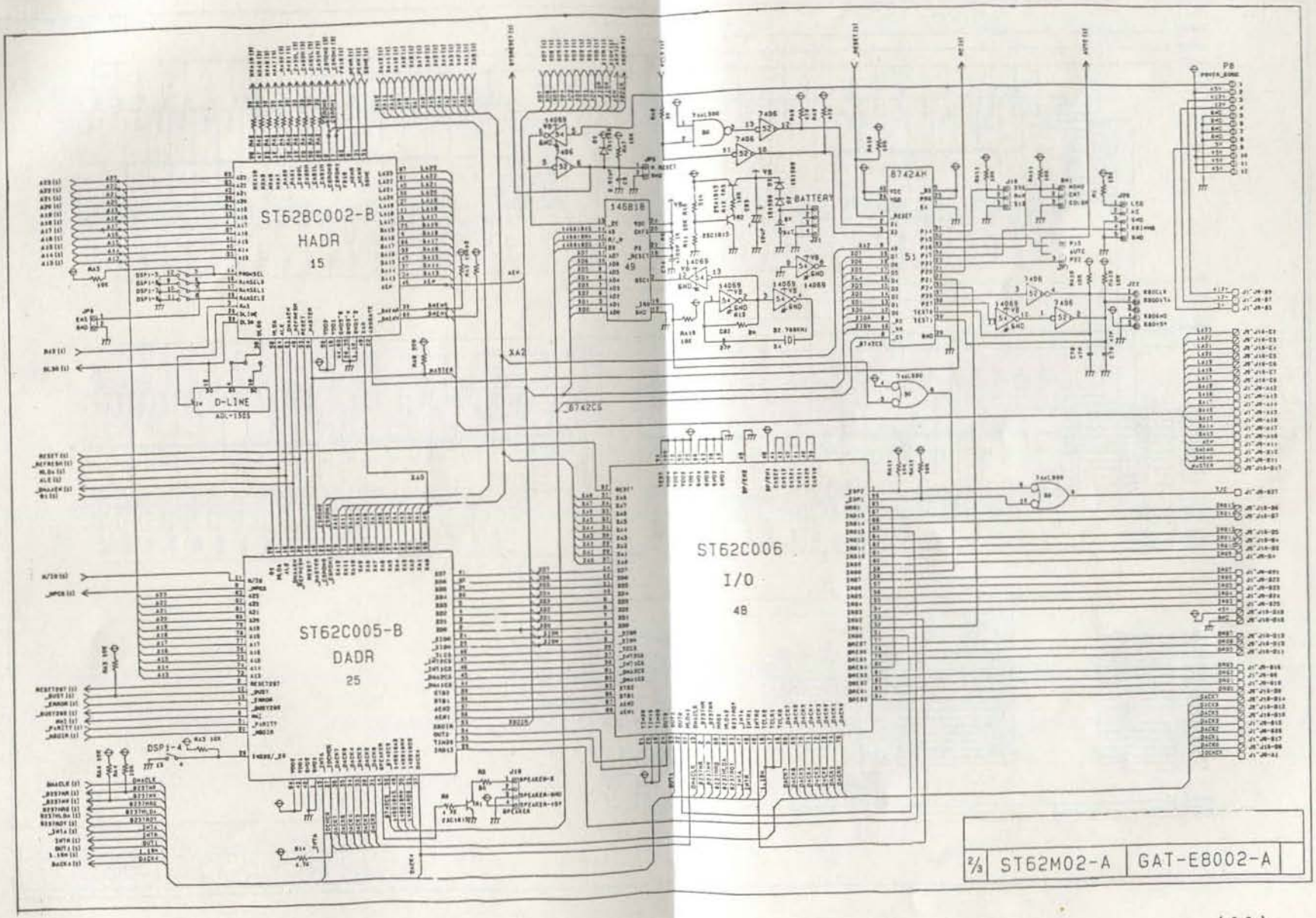
ST62BC002-B
HADR
15
ST62C005-B
DADR
25
ST62C006
I/O
48
D-LINE
BATTERY
8742AH
146818
8742CS
DSP1-4
2/3
ST62M02-A
GAT-E8002-A

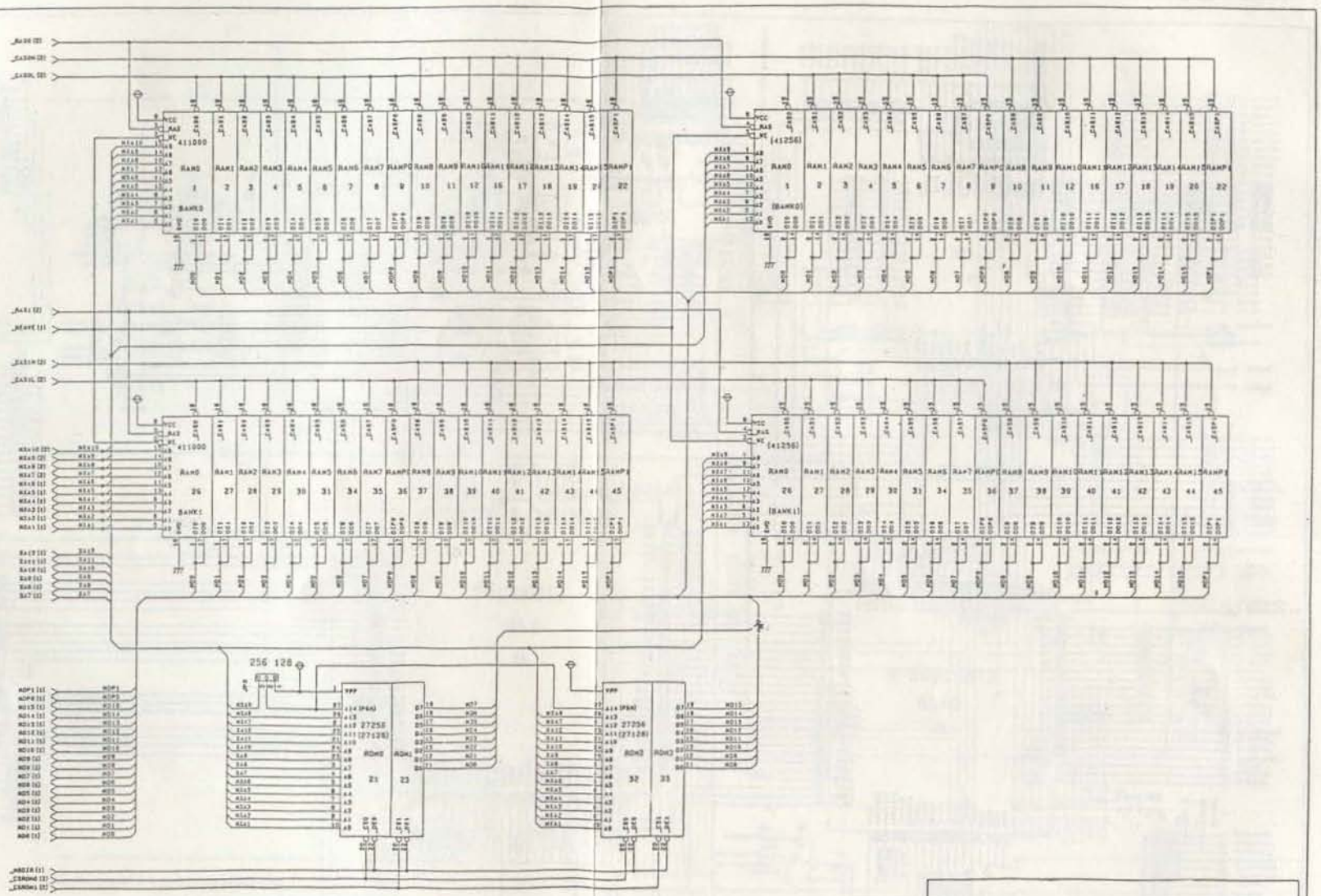

3/3	ST62M02-A	GAT-E8003-A